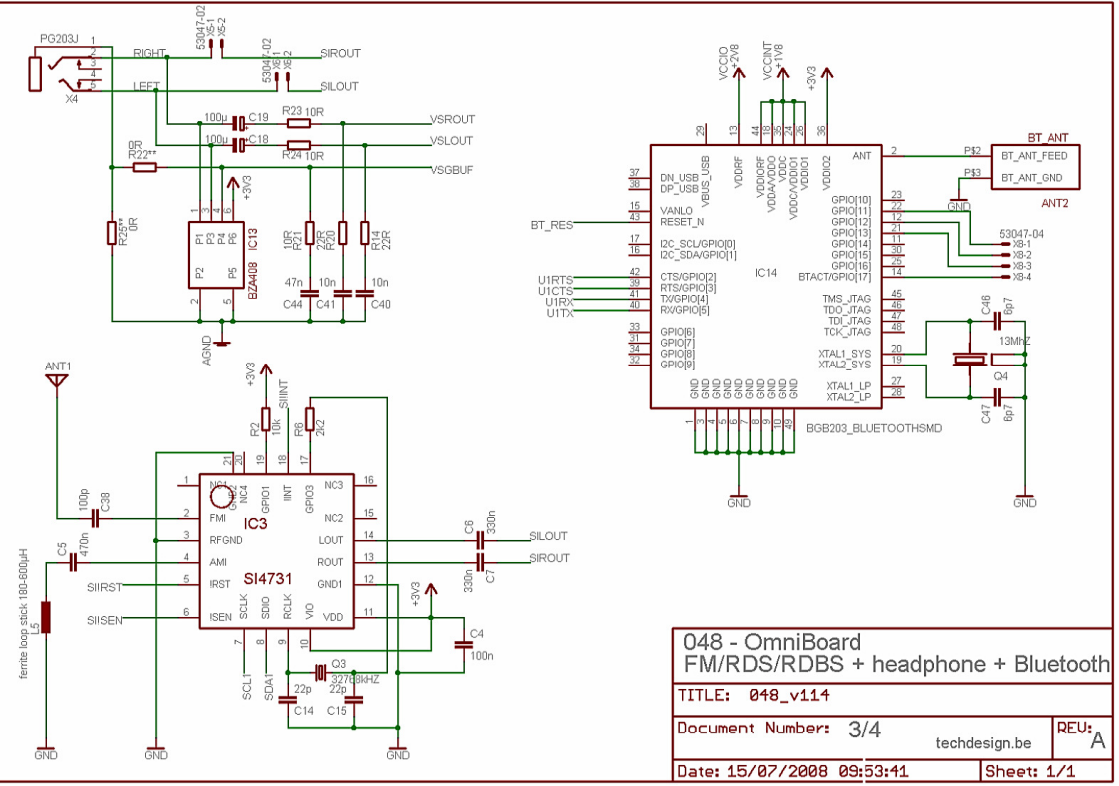

048 - OmniBoard
FM/RDS/RDBS + headphone + Bluetooth

TITLE: 048_v114

Document Number: 3/4 techdesign.be REV: A

Date: 15/07/2008 09:53:41 Sheet: 1/1

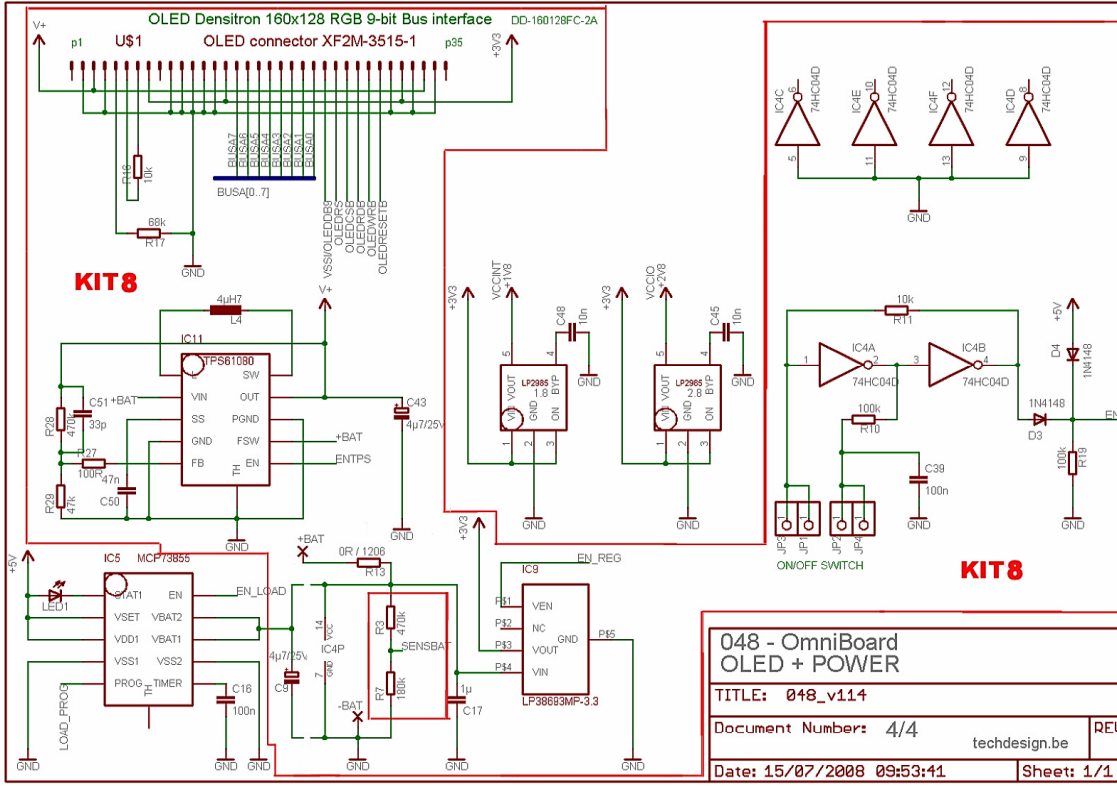

048 - OmniBoard
OLED + POWER

TITLE: 048_v114

Document Number: 4/4 techdesign.be REV

Date: 15/07/2008 09:53:41 Sheet: 1/1

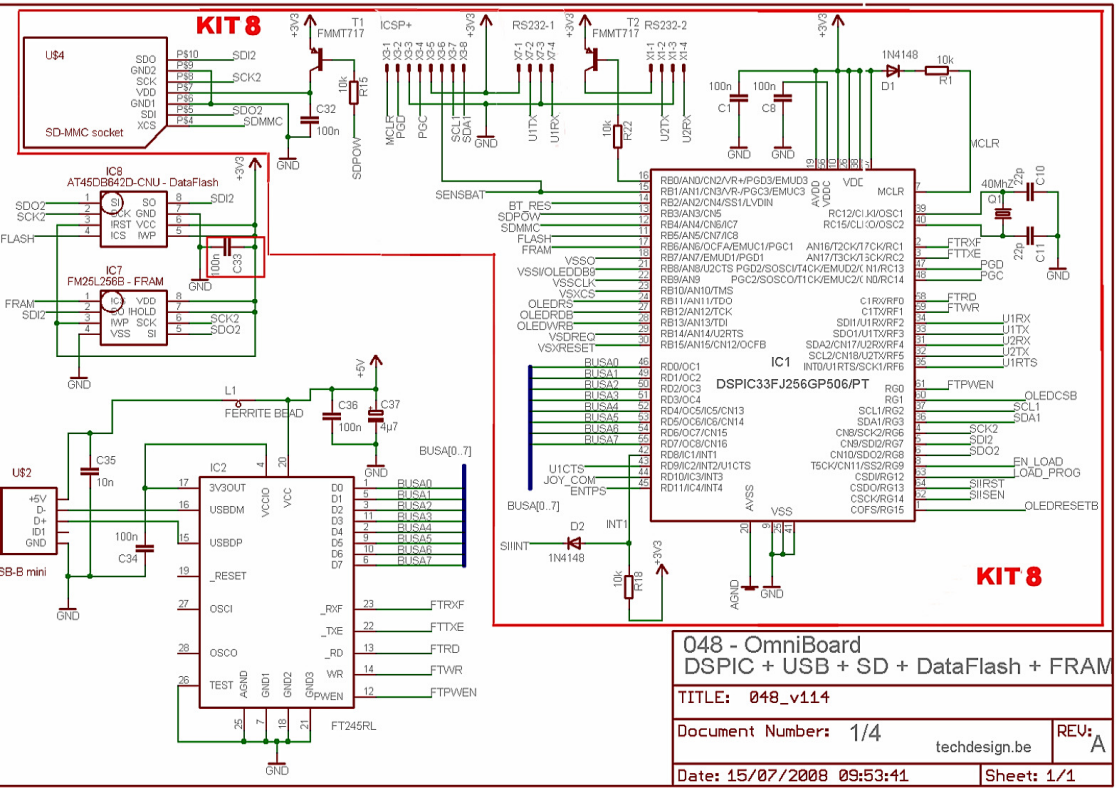

048 - OmniBoard
DSPIC + USB + SD + DataFlash + FRAM

TITLE: 048_v114

Document Number: 1/4 techdesign.be REV: A

Date: 15/07/2008 09:53:41 Sheet: 1/1

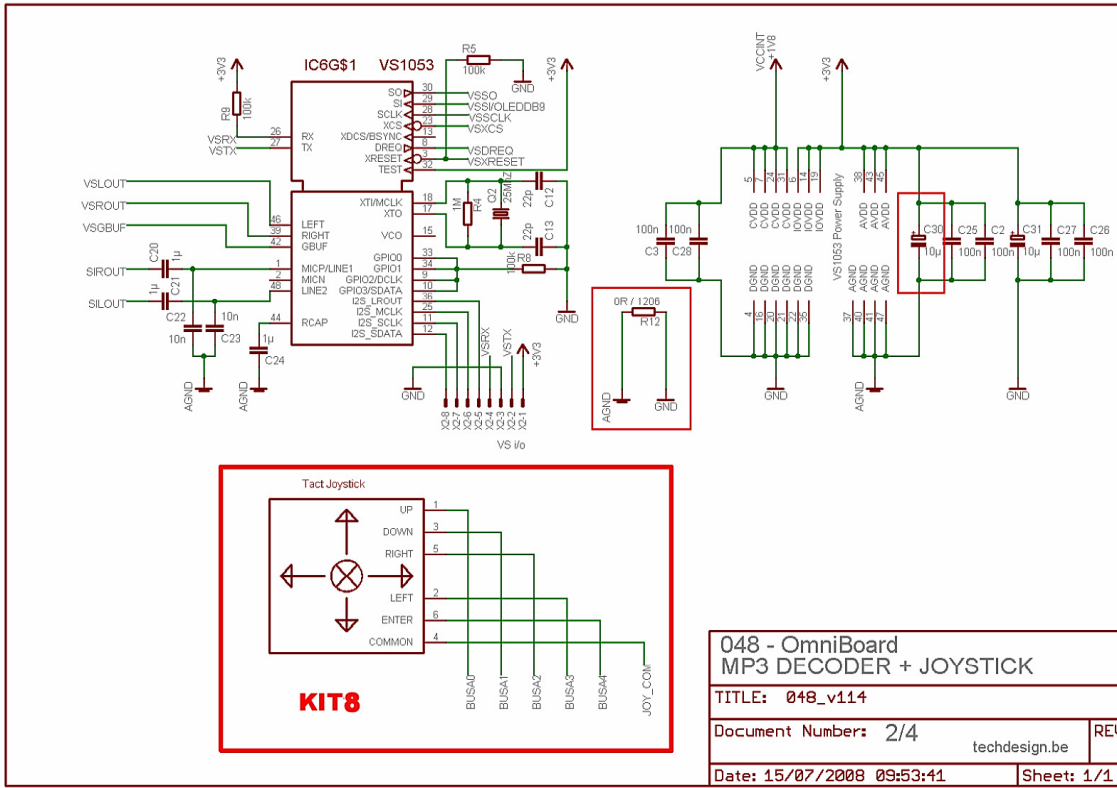

048 - OmniBoard
MP3 DECODER + JOYSTICK

TITLE: 048_v114

Document Number: 2/4 techdesign.be REV

Date: 15/07/2008 09:53:41 Sheet: 1/1